Croma
Croma 220 Air 1jet Showerpipe EcoSmart 9 l/min
Surfaces: **chrome** Article Number: **27188000**

Description

product features

- overhead shower Croma 220
- shower head size: 220 mm
- overhead shower angle adjustable
- spray type: RainAir
- flow rate RainAir spray (at 0.3 MPa): 9.5 l/min
- shower arm length: 400 mm
- swivel shower arm
- thermostat Ecostat Comfort
- safety lock at 40° C
- adjustable hot water limitation
- outlets controlled via turning handle
- installation type: exposed installation
- connection dimension DN15
- connection thread G ½
- centre distance 150 mm ± 12 mm
- height-adjustable hand shower holder
- suitable for continuous flow water heaters with an output of 18 kW
- scope of supply: wall bar spacer 8 mm (no.95239000)

consists of

- Croma 220 Air 1jet overhead shower EcoSmart 9 l/min (#26465XXX)
- Isiflex shower hose 1.60 m (#28276XXX)
- Croma 100 Vario hand shower EcoSmart 9 l/min (#28537XXX)

Technology

Product image
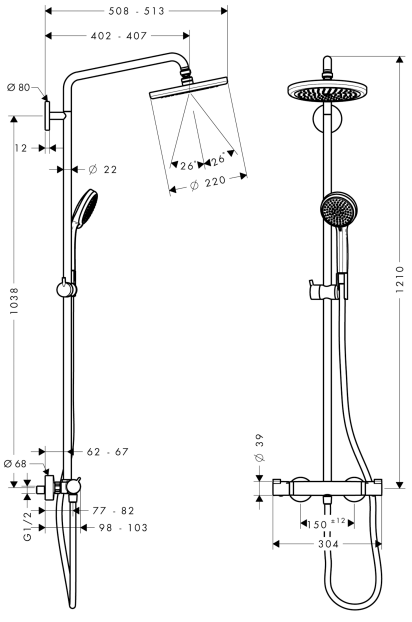
Scale drawing