Luxury

massage bathtub

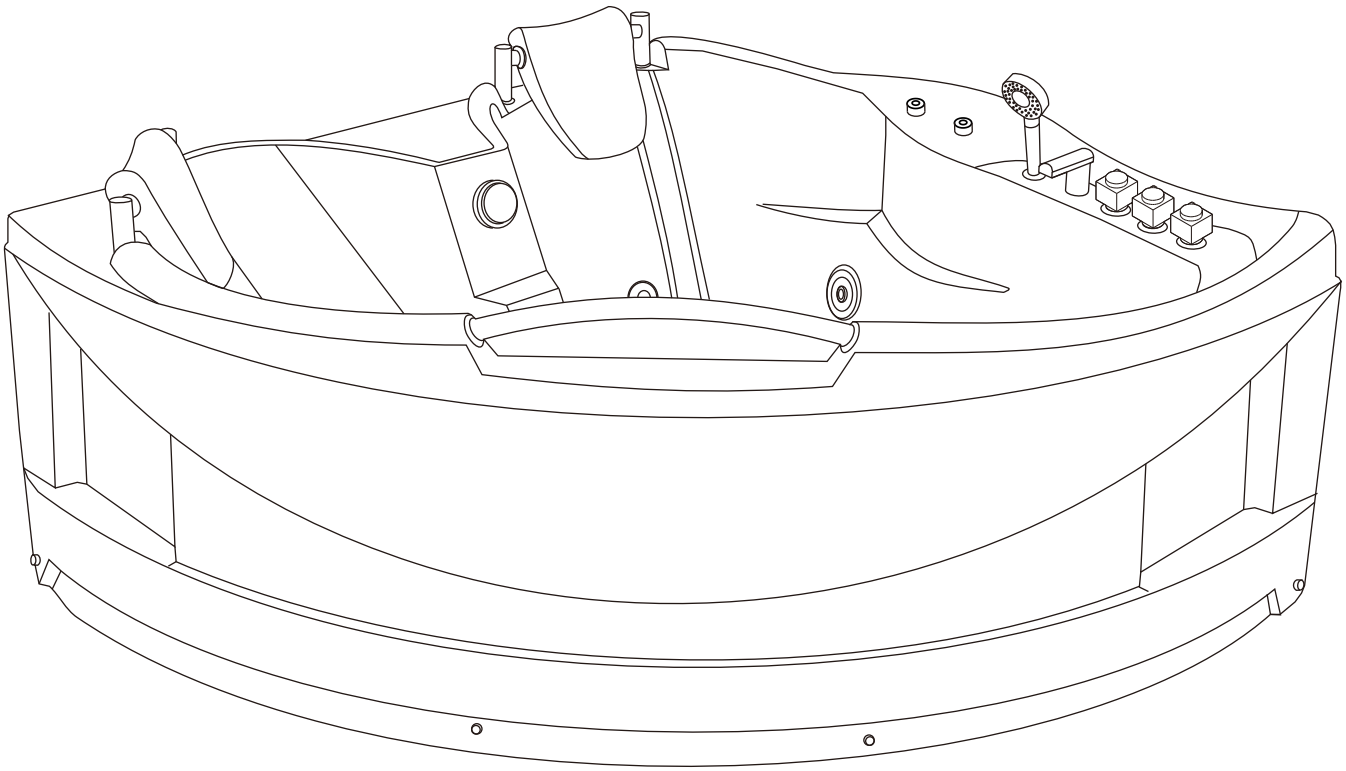

BK-005 BK-005V

1500x1500x680 mm

Functional Introduction

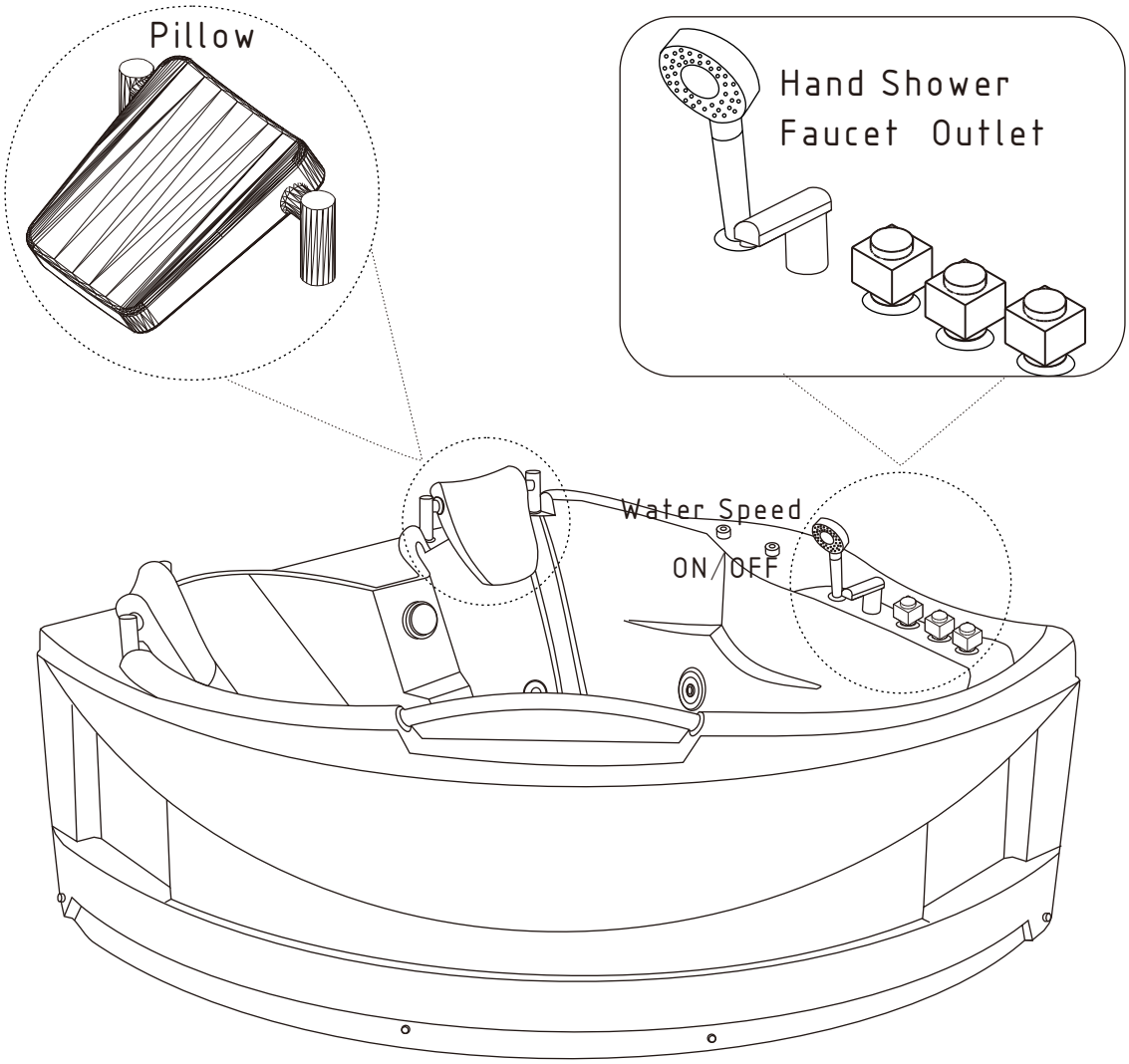

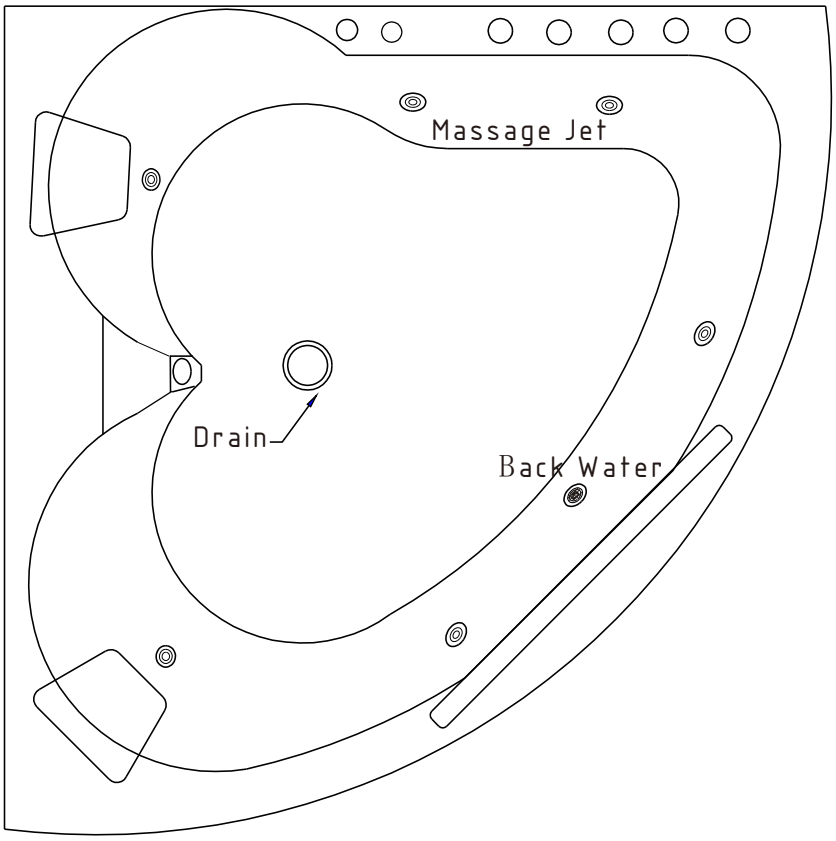

Water & Electricity Position Design

Length unit: mm

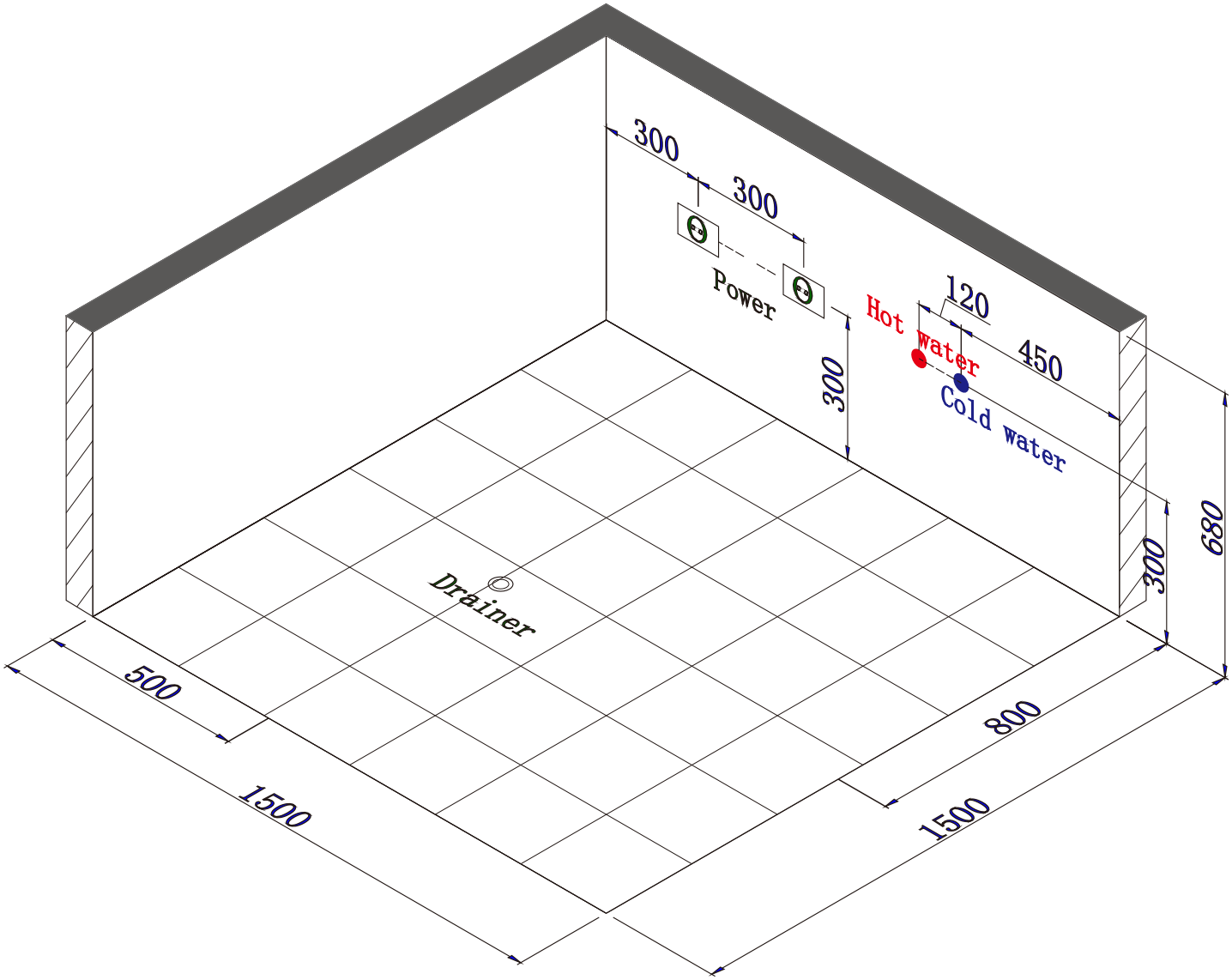

Power Request

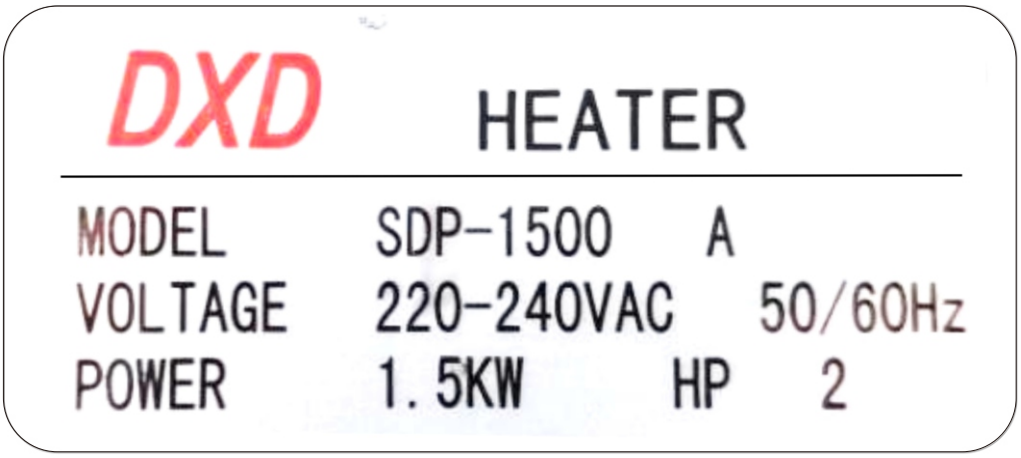

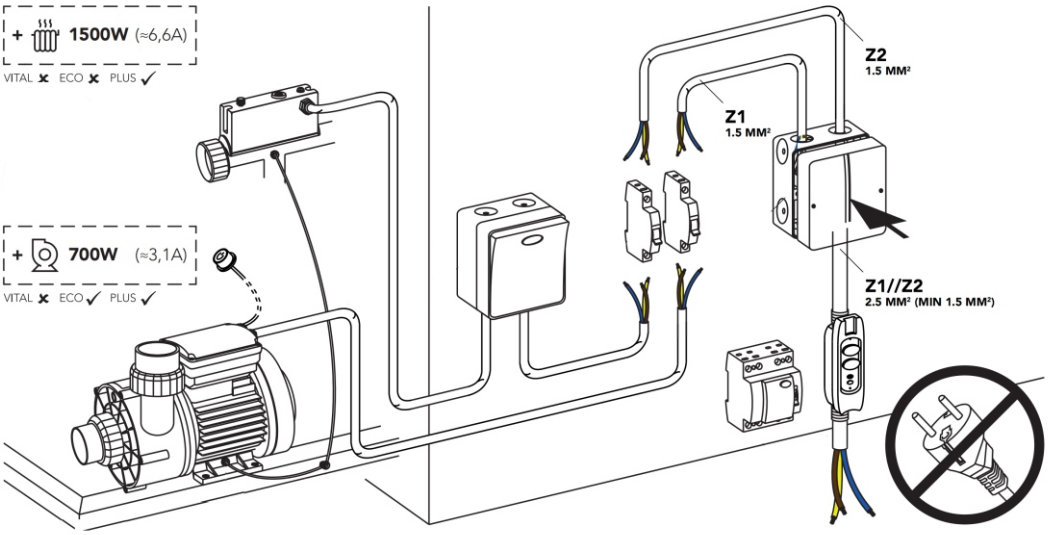

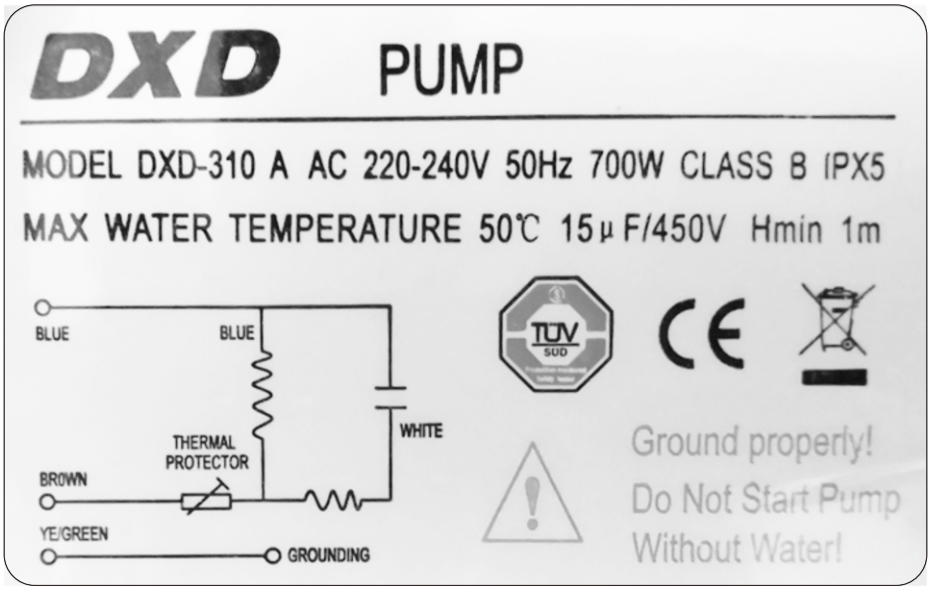

Accessories Installation

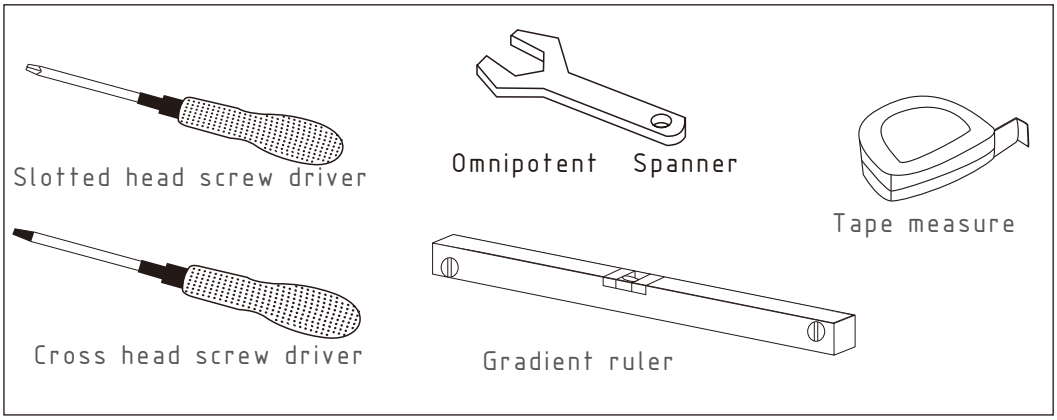

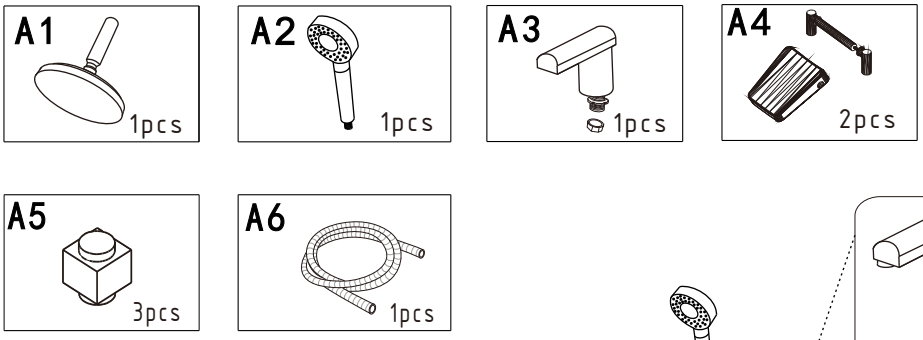

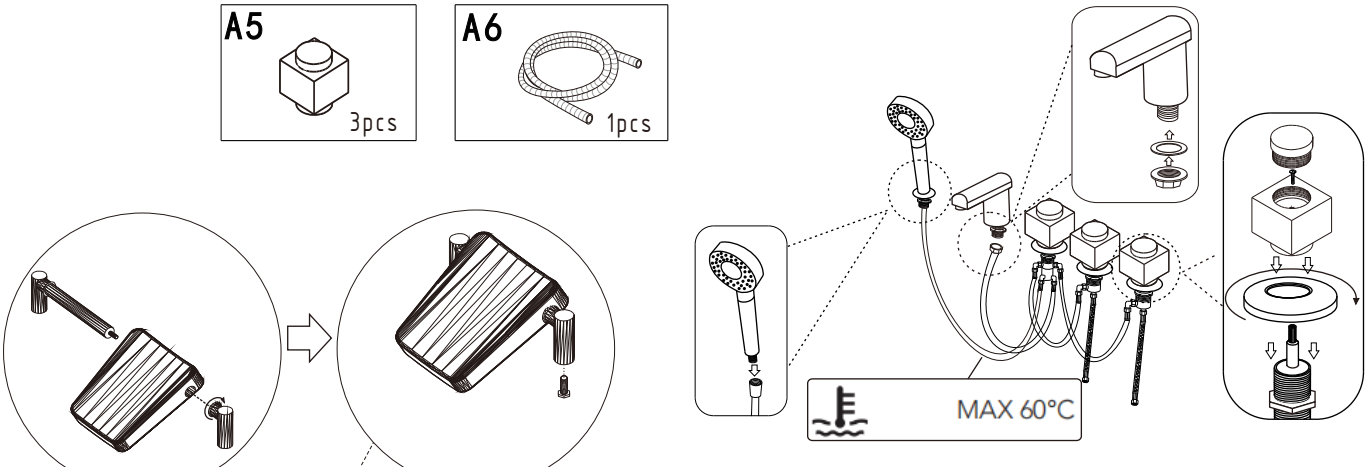

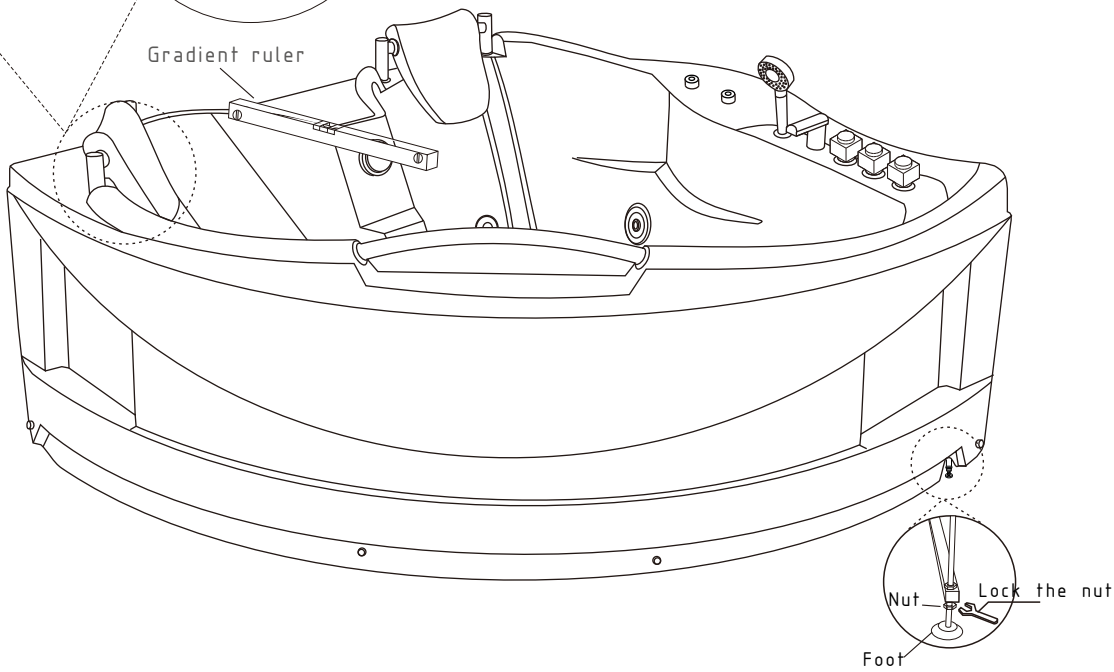

Functional Instructions

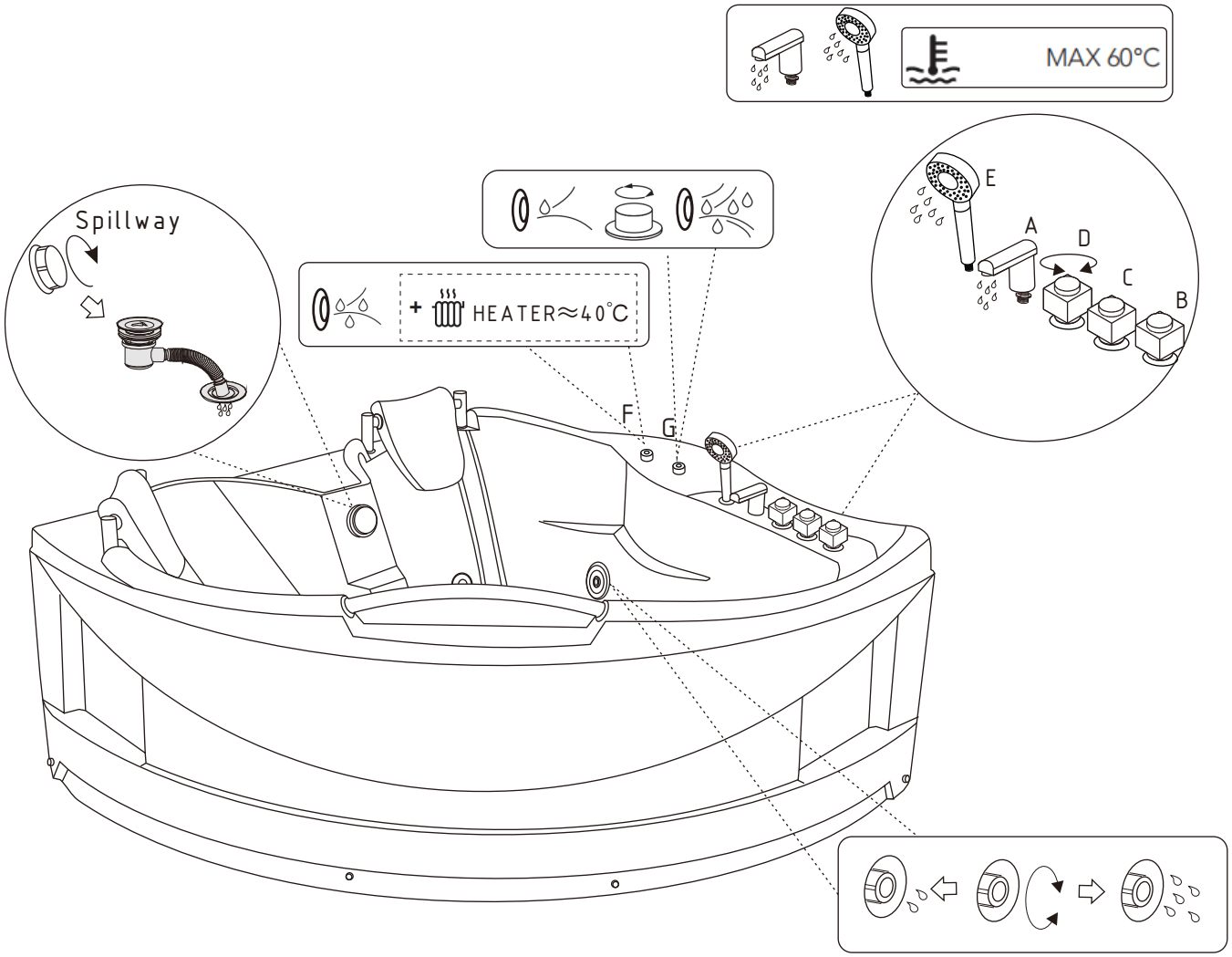

Open F, the water pump, heater start.
Open G, the water runs faster.
Open B, cool water.
Open C, hot water.
Open D, water comes from A or E.
Warning: do not open F without water!!