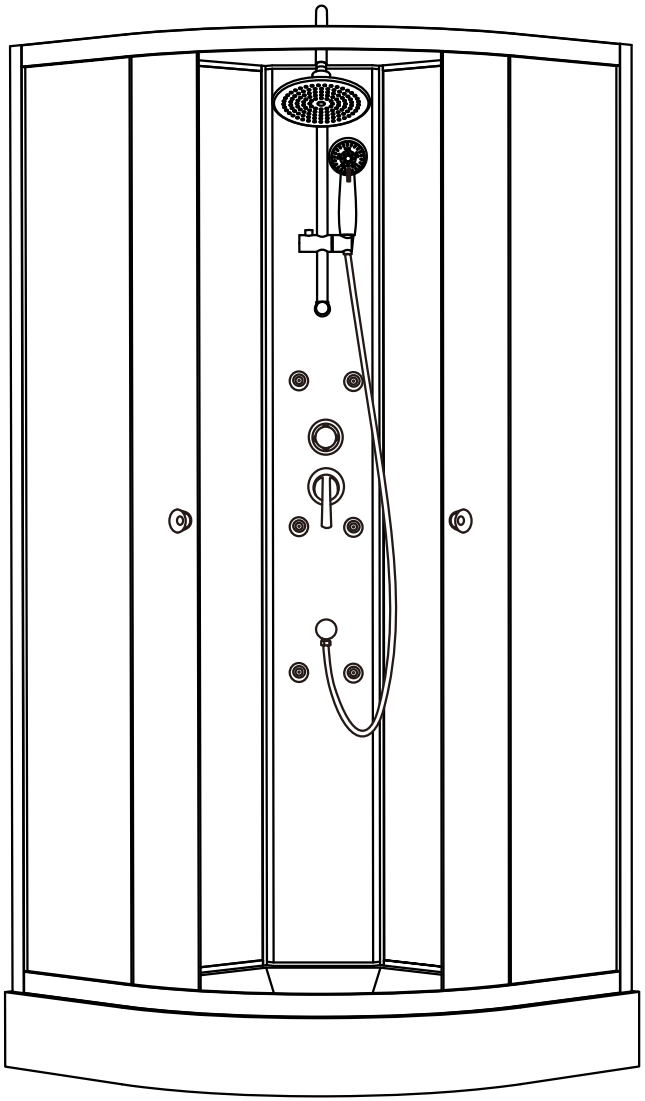

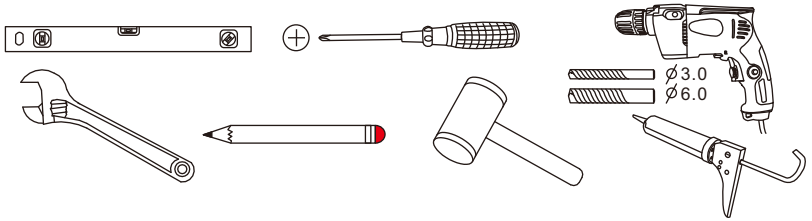


| | | | | | | | | |
|---|---|---|---|---|---|---|---|---|
| A | | X2 | H | | X1 | O | ST4X16 | X16 |
| B | | X2 | I | | X4 | P | ST4X12 | X4 |
| C | | X2 | J | | X4 | Q | BIG ST4X12 | X6 |
| D | | X2 | K | | X4 | R | | |
| E | | X2 | L | | X2 | S | | |
| F | | X1 | M | | X1 | T | | |
| G | | X4 | N | ST4X30 | X8 | U | | |

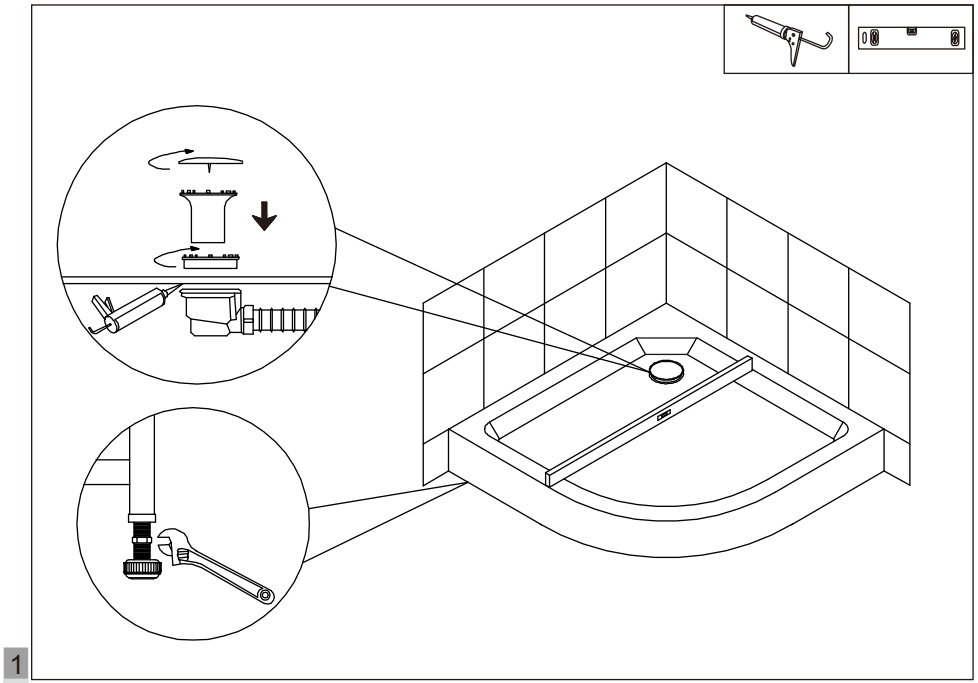

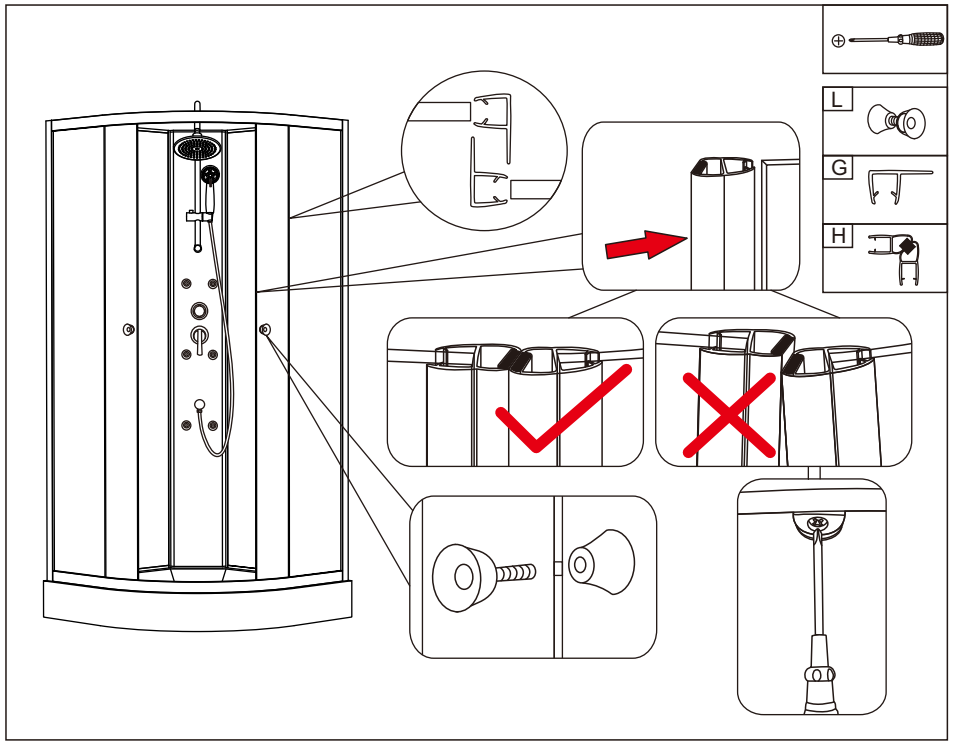


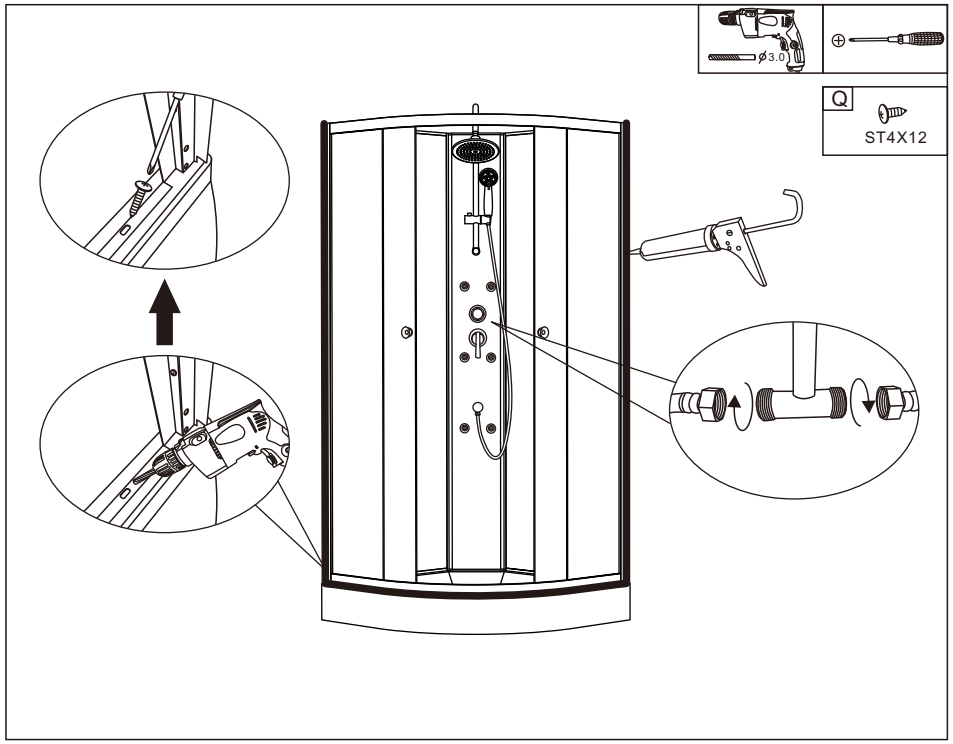

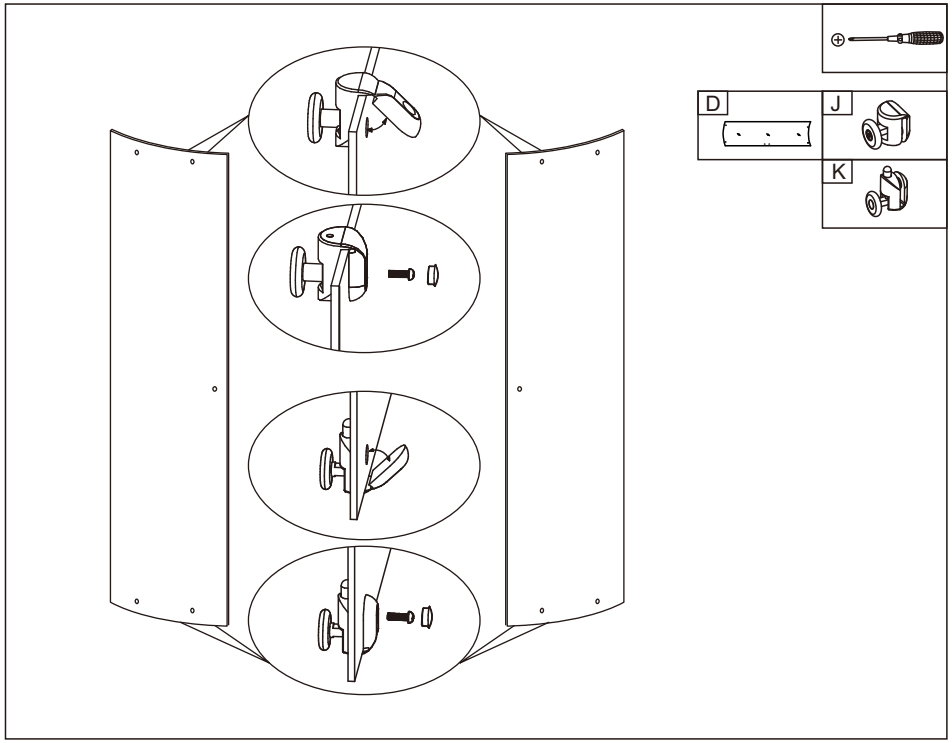
D
J
K

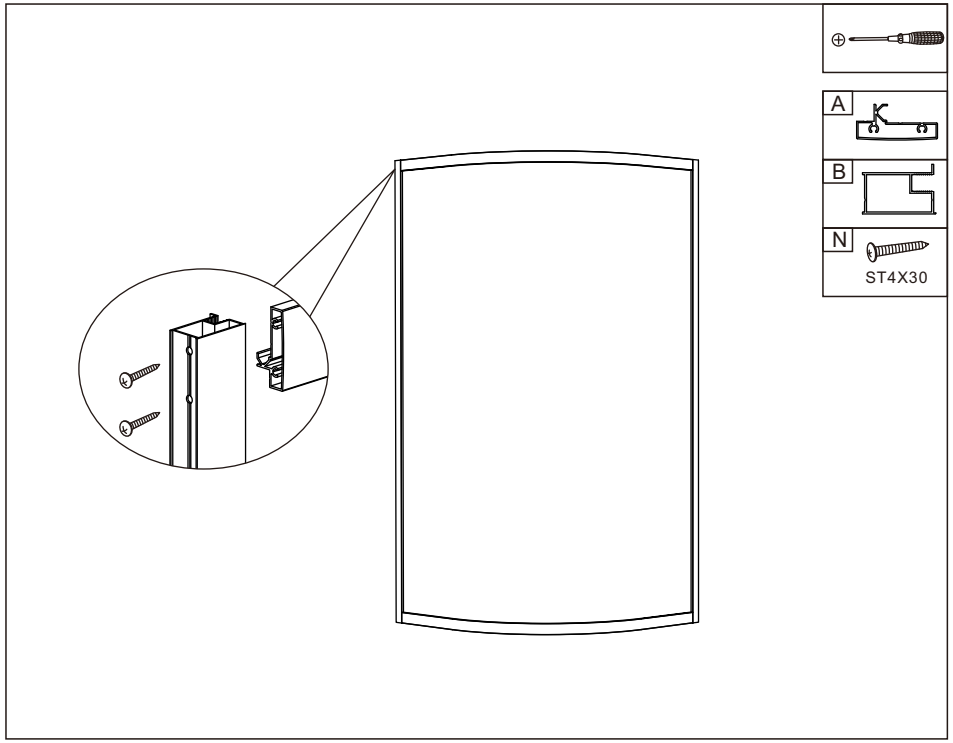
A
B
N
ST4X30

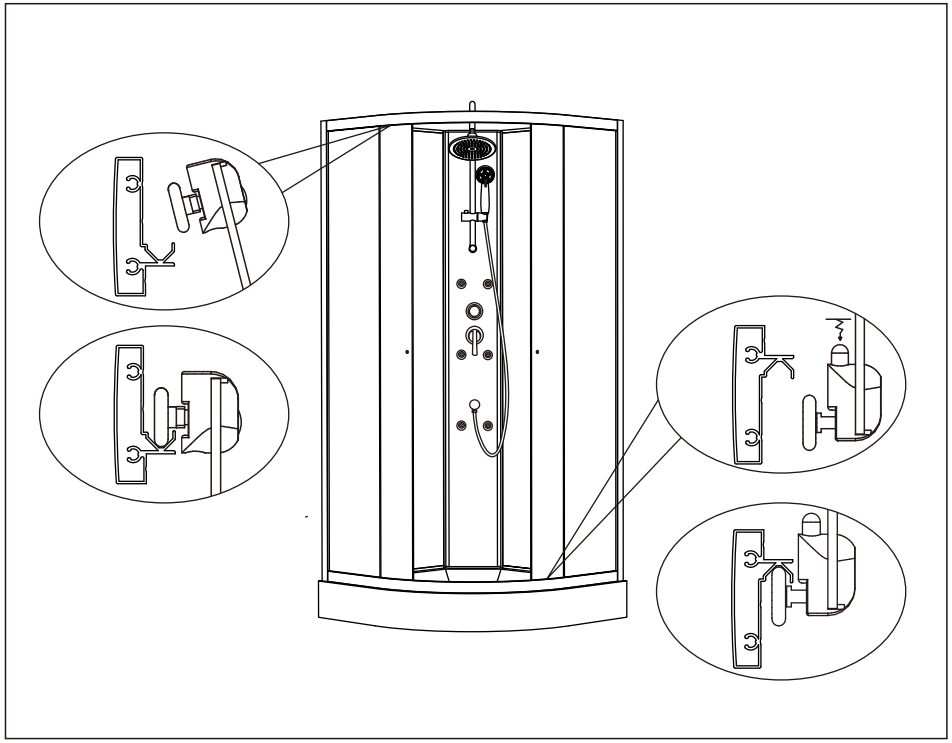

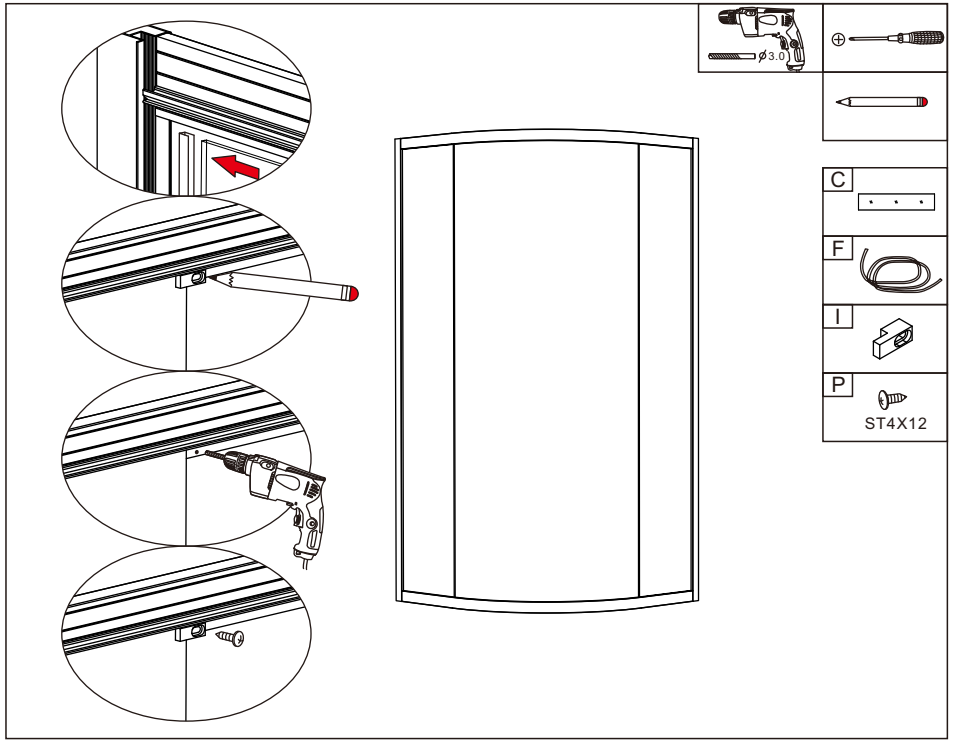
ø3.0
C
F
I
P
ST4X12

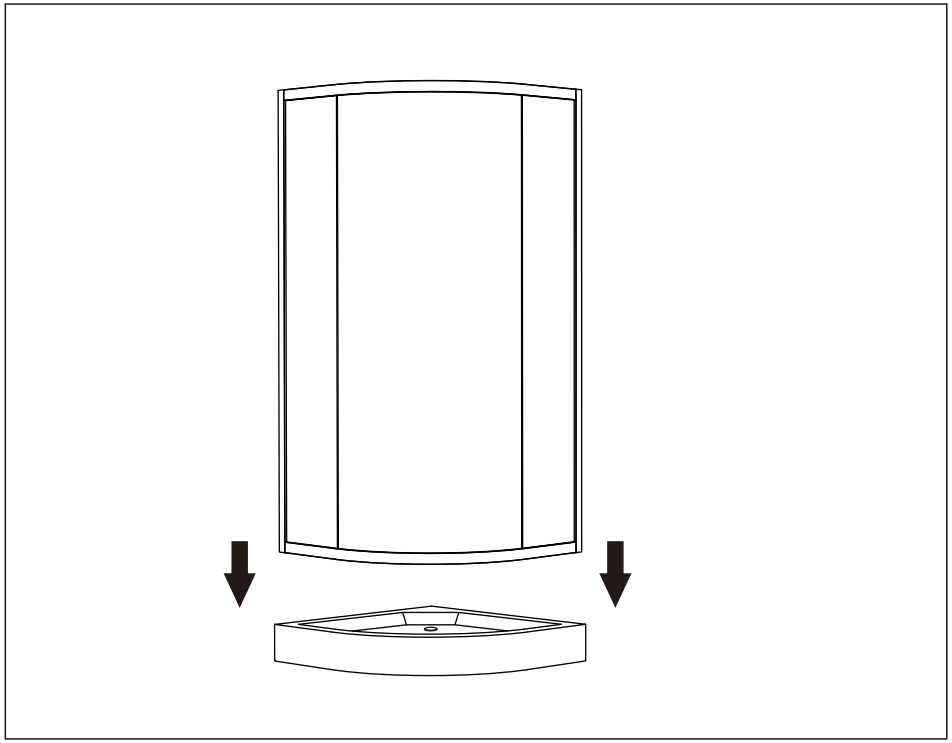

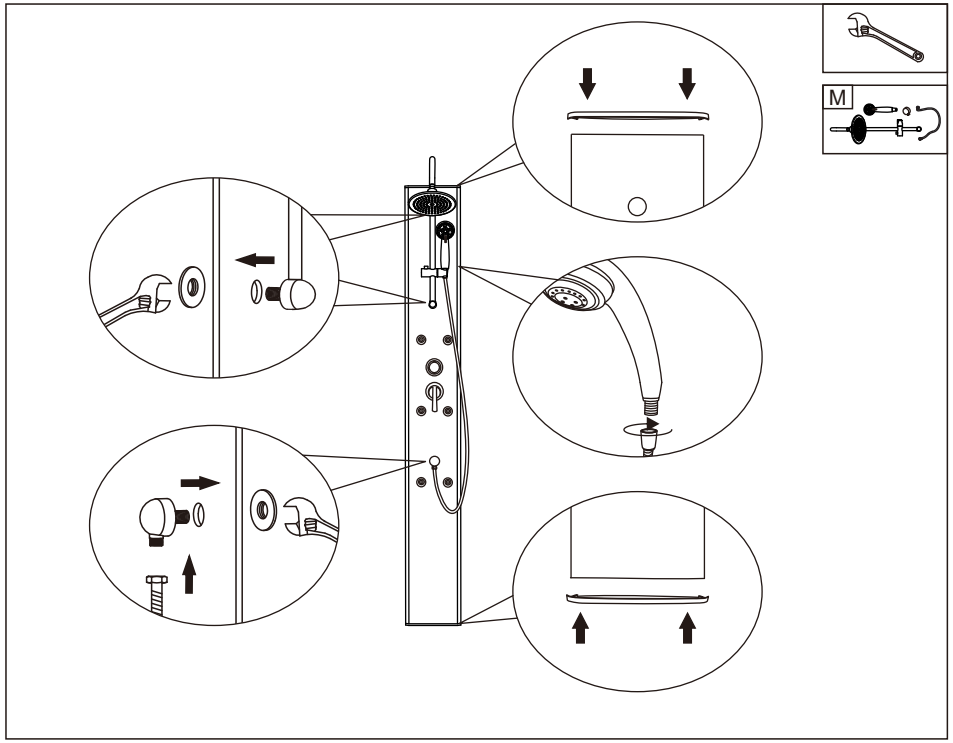
M

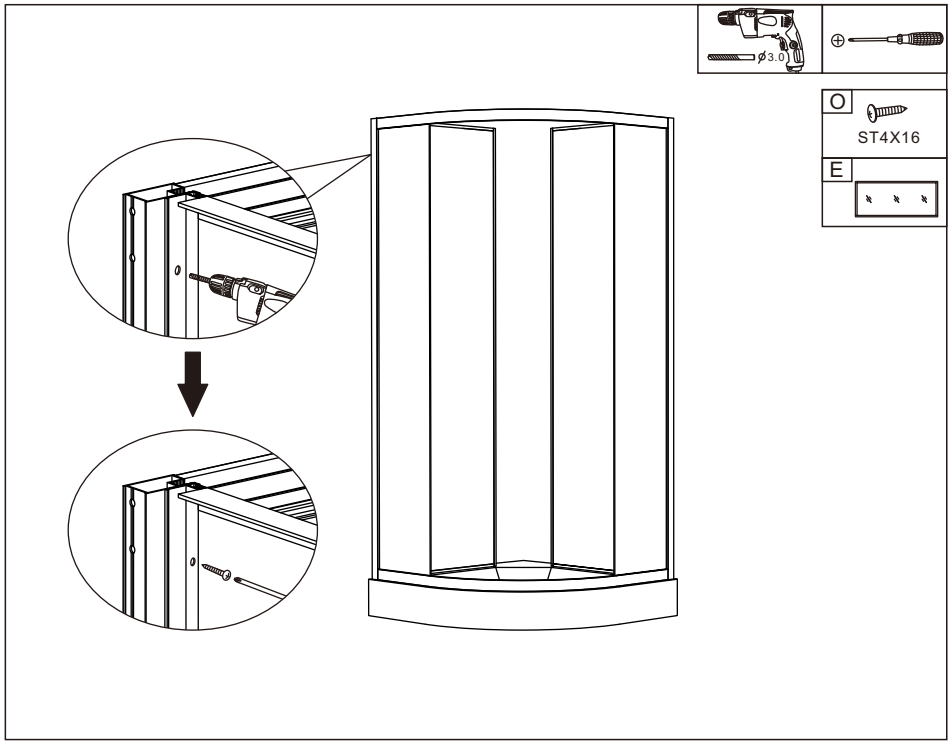
ø3.0
O
ST4X16
E

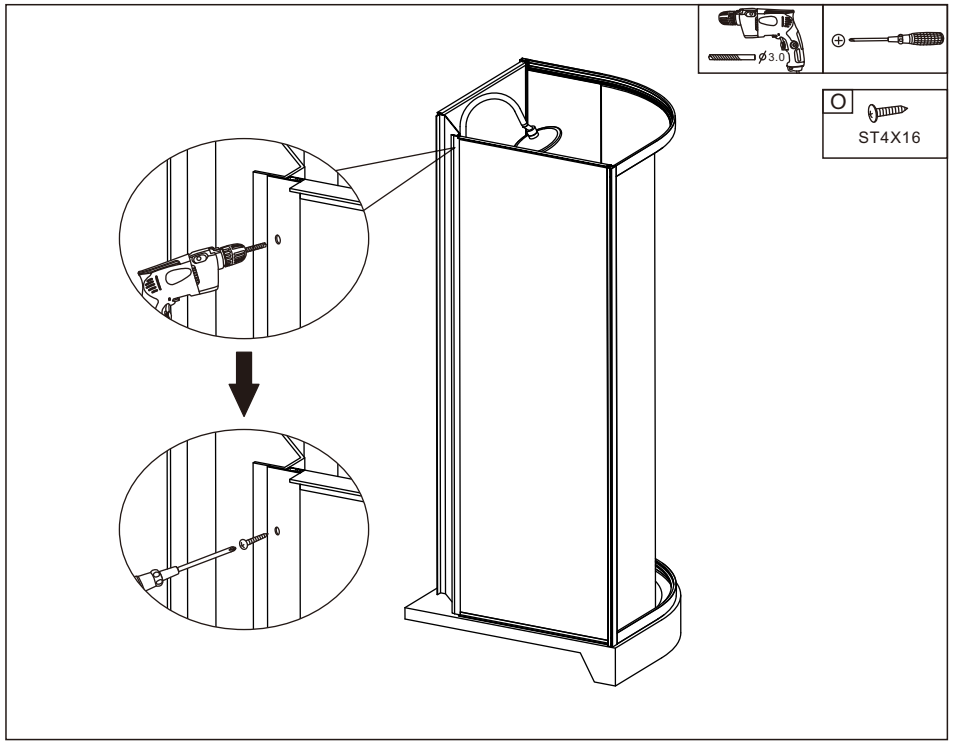
ø3.0
O
ST4X16